REV.	DESCRIPTION	DATE
A	NEW DRAWING	11/30/2005

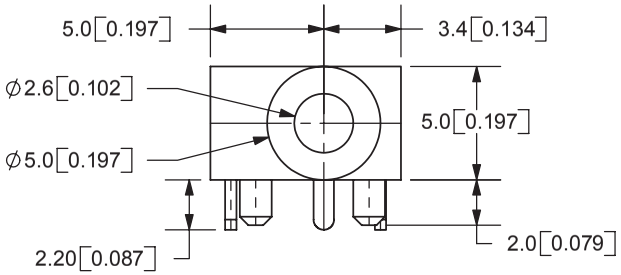

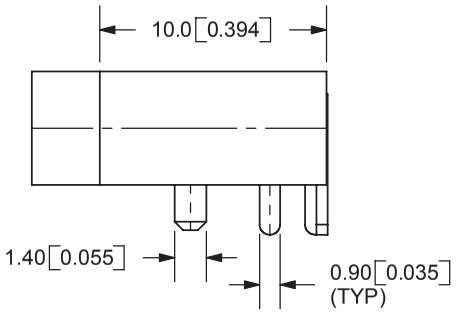

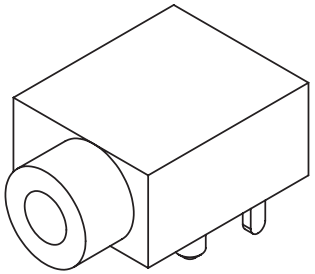

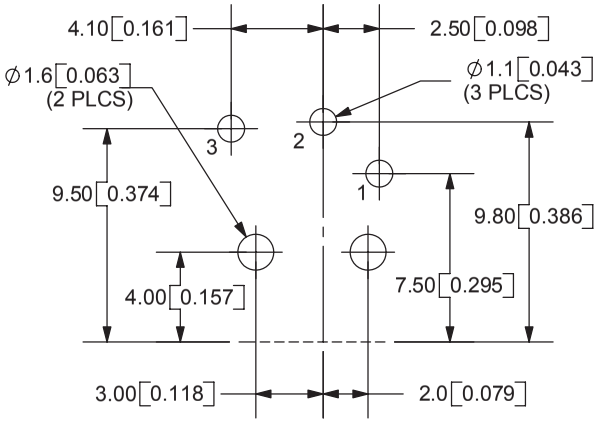

PCB LAYOUT
TOP VIEW

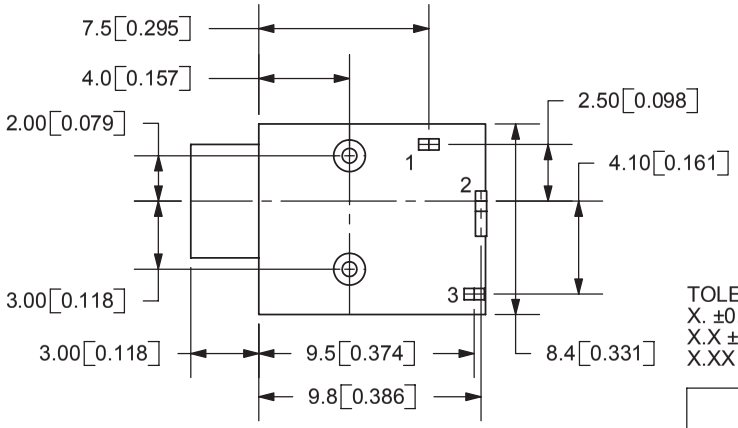

TOLERANCE:
X. ±0.5mm
X.X ±0.3mm
X.XX ±0.15mm

MODEL NO.	MJ-2509N
SCHEMATIC	2 TS 3 T 1 S

SPECIFICATIONS:
RATING: 12V DC @ 1A
CONTACT RESISTANCE: 30m OHMS MAX
INSULATION RESISTANCE: 100M OHMS MIN: 500V DC
VOLTAGE WITHSTAND: 500V AC R.M.S. FOR 1 MINUTE
LIFE: 5,000 CYCLES
OPERATING TEMP: -20° ~ +60°C

	MATERIAL	PLATING
TERMINAL 1	PBS	Tin
TERMINAL 2	Brass	Tin
TERMINAL 3	PBS	Tin
HOUSING	PBT	

CUI INC
20050 SW 112th Ave.
Tualatin, OR 97062
Phone: 503-643-4899
800-275-4899
Fax: 503-372-1266
Website: www.cui.com

TITLE: 2.5mm AUDIO JACK-MONO
REV: A
PART NO. MJ-2509N
UNITS: MM [INCHES]
DRAWN BY: ZRJ
APPROVED BY:
SCALE: 3:1

PC FILE NAME: MJ-2509N

COPYRIGHT 2006 BY CUI INC.

For more information, please visit the product page.