THIS DRAWING IS UNPUBLISHED. RELEASED FOR PUBLICATION -.- .
© COPYRIGHT - BY TYCO ELECTRONICS CORPORATION. ALL RIGHTS RESERVED.

LOC	DIST
A	66

REVISIONS

P	LTR	DESCRIPTION	DATE	DWN	APVD
	B	ECR-07-016690	7-2007	MY	TE

PART NUMBER	REV	FIRST USED	TERMINATOR	FEED TYPE	DESCRIPTION
1339589-1	B	-	BENCH & LEADMAKER	MECH POST FEED	HD-1 APPLICATOR
7-1339589-1	B	-	BENCH & LEADMAKER	MECH POST FEED	-1 AND SPARE PARTS
7-1339589-7	A	-	-	-	SPARE PARTS KIT

CRIMP DATA ESCUBEDO TERMINAL AMP CRIMP SPECS

TERMINAL NAME: 4Ø TABS

CRIMP	SIZE	TYPE	RANGE
WIRE	2.54 [.100 IN]	F	1.00-2.50mm²
INSUL	4.57 [.180 IN]	F	3.00-4.30 [.118-.169 IN]

WIRE STRIP LENGTH 3.90-4.70 [.154-.185 IN]

APPL INSTRUCTION 408-8323

TERMINAL - - APPL SPEC 114-3118 -

FEED 25.65 [1.010 IN]

TERMINALS APPLIED

AMP PN	MFR PN	-	-	-
1572016-1	7502.00	-	-	-
-	-	-	-	-
-	-	-	-	-
-	-	-	-	-
-	-	-	-	-
-	-	-	-	-
-	-	-	-	-

WIRE SIZE mm² AWG	CRIMP HEIGHT 5	PIN PN AND LENGTH [IN]
2.50mm²	2.08 ±0.05 [.082 ±.002 IN]	1-354778-8 [.2585]
2.00mm²	1.93 ±0.05 [.076 ±.002 IN]	3-354778-1 [.2650]
1.50mm²	1.78 ±0.05 [.070 ±.002 IN]	4-354778-2 [.2705]
1.00mm²	1.60 ±0.05 [.063 ±.002 IN]	5-354778-8 [.2785]
-	-	-
-	-	-
-	-	-
-	-	-
-	-	-
-	-	-
-	-	-
-	-	-
-	-	-
-	-	-
-	-	-

SET UP GAGE	LAYOUT
458638-3	L1339589

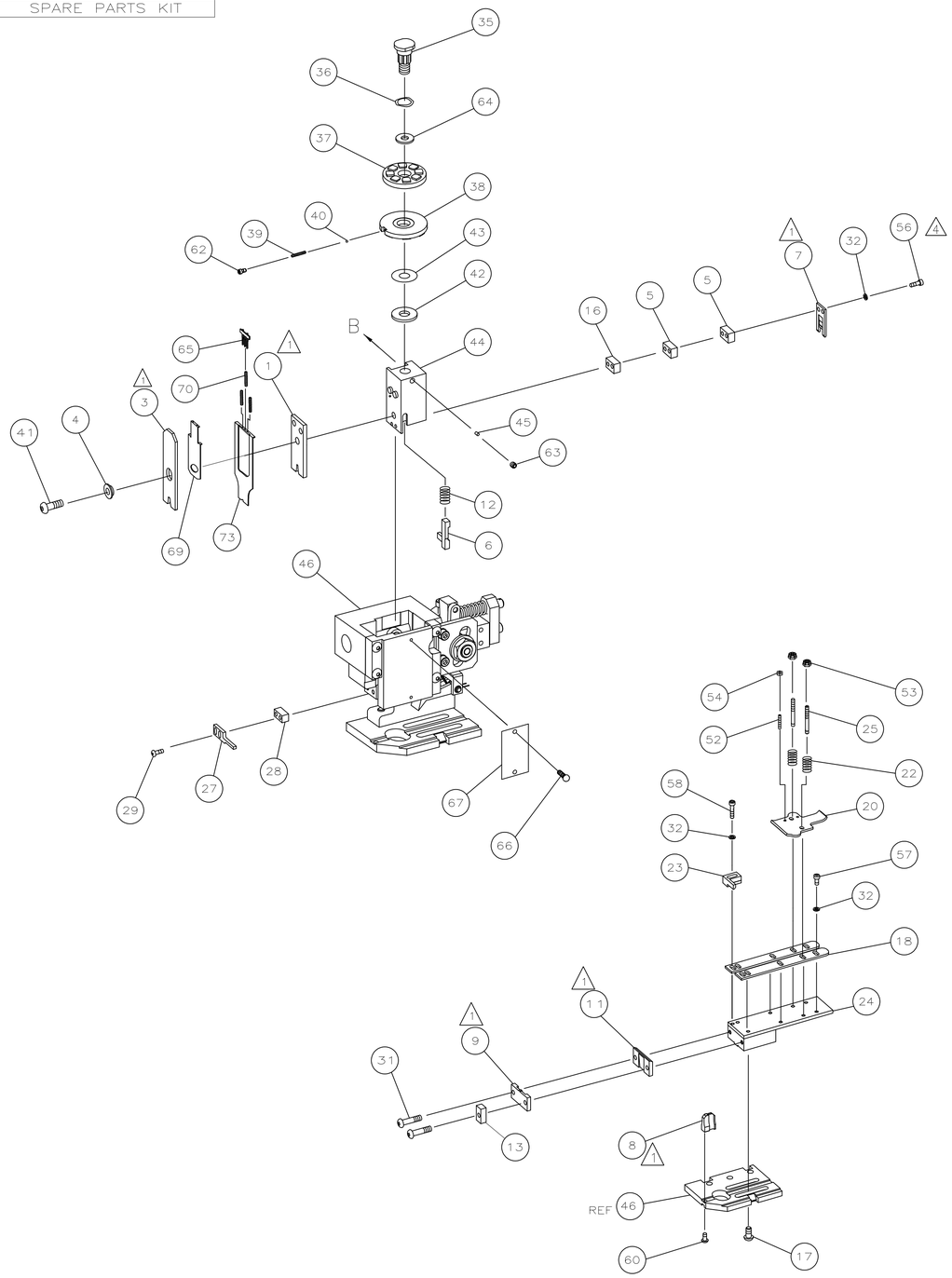

1. RECOMMENDED SPARE PARTS.
2. GREASE RAM, CAM, CAM FOLLOWER AND FEED ROD LIGHTLY.
3. LUBRICATE DAILY PER THE APPLICATOR INSTRUCTION SHEET SUPPLIED WITH THE APPLICATOR.
4. CUT TO LENGTH AT ASSY.
5. CRIMP DATA CALCULATED BY TYCO.

VIEW B ROTATED 180°

POST-FEED 40 mm STROKE

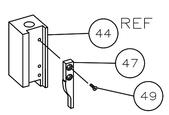

LEADMAKER OR BENCH G

POST-FEED 30 mm STROKE

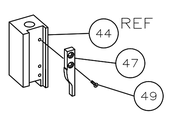

K TERMINATOR BENCH MACHINE

	QTY REQD PER ASSY			PARTS LIST		
	-	1	1	1490525-3	DEPRESSOR, WIRE	73
	-	1	1	1339589	PRINT, APPLICATOR LOG SHEET	72
	-	1	1	1338705-2	DOCUMENTATION PACKAGE	71
	-	3	3	2-23147-2	SPRING, DEPRESSOR	70
	-	1	1	1490524-1	SPACER, DEPRESSOR	69
						68
	-	1	1	461264-1	PLATE, IDENTIFICATION	67
	-	2	2	21017-2	SCR,DRIVE(#2X.19)ID PLATE	66
	-	1	1	1424350-1	HOLDER, PIN, WIRED	65
	-	1	1	986950-1	WASHER, FLAT PRECISION	64
	-	1	1	3-18031-0	SCR,SKT SET(M6X6)RAM	63
	-	1	1	18023-9	SCR,SKT CAP(M4X6)CP DSC	62
						61
	-	1	1	18024-7	SCR,BHC(M4X10)ANVIL	60
						59
	-	2	2	1-18023-3	SCR,SHC(M4X16)HOLD DOWN	58
	-	5	5	1-18023-0	SCR,SHC(M4X8)STRIP GUIDE	57
4	-	2	2	1-18023-4	SCR,SHC(M4X20)SLUG BLADE	56
						55
	-	2	2	18029-1	NUT,HEX(M3)DRAG	54
	-	2	2	986965-1	NUT,HEX SL(M4)DRAG STUD	53
	-	2	2	2-18032-2	SCR,SKT SET(M3X10)DRAG	52
						51
						50
	-	1	1	18024-3	SCR,BHC(M3X10)CAM	49
						48
	-	1	1	1338676-1	CAM, POST-FEED 30 & 40 mm ST	47
	-	1	1	1338662-1	APPLICATOR, BASIC (SUBASSY)	46
	-	1	1	690191-1	PLUG, NYLON	45
	-	1	1	1320998-1	RAM	44
	-	1	1	690125-1	WASHER, LAMINATED	43
	-	1	1	690124-4	WASHER, RAM	42
	-	1	1	2-18024-6	SCREW,BHC(M8X25)CRIMPER	41
	-	1	1	23241-1	BALL, STEEL	40
	-	1	1	2-22278-7	SPRING, COMPRESSION	39
	-	1	1	1320922-1	DISC, INSULATION	38
	-	1	1	354777-1	WIRE DISC, PLASTIC	37
	-	1	1	22480-5	WASHER, SPRING	36
	-	1	1	690212-1	POST, RAM	35
						34
						33
	-	9	9	18025-2	WASHER,LOCK(M4)SHEAR BL	32
	-	2	2	4-18024-7	SCR,BHC(M4X25)SHEAR PL	31
						30
	-	2	2	18024-8	SCR,BHC(M4X12)STRIPPER	29
	-	1	1	3-690451-2	SPACER, STRIPPER	28
	-	1	1	240639-1	STRIPPER	27
						26
	-	2	2	1320906-1	DRAG, STUD	25
	-	1	1	1320995-1	STRIP GUIDE	24
	-	1	1	240825-6	PLATE, STRIP HOLD DOWN	23
	-	2	2	4-22281-1	SPRING, DRAG	22
						21
	-	1	1	1338665-1	DRAG, STOCK	20
						19
	-	2	2	1338663-6	GUIDE, LOWER STRIP	18
	-	4	4	1-18024-8	SCR,BHC(M6X12)STRIP GD PL	17
	-	1	1	1338708-1	SPACER, SLUG BLADE	16
						15
						14
	-	1	1	1-690481-0	SPACER, HOLD DOWN	13
	-	1	1	23846-1	SPRING, HOLD DOWN	12
1	-	1	1	240644-1	PLATE, REAR SHEAR	11
						10
	-	1	1	690496-3	PLATE, FRONT SHEAR	9
1	1	2	1	1333218-3	ANVIL	8
	-	1	1	690474-3	BLADE, SLUG	7
	-	1	1	2-455892-5	HOLD DOWN, TERMINAL	6
	-	2	2	2-240641-9	SPACER, SLUG BLADE	5
	-	1	1	238009-1	SPACER, BLOCK CRIMPER	4
1	1	2	1	456134-6	CRIMPER, INSULATION	3
						2
1	1	2	1	456407-8	CRIMPER, WIRE	1
	-77	-71	-1	PART NO	DESCRIPTION	ITEM NO

THIS DRAWING IS A CONTROLLED DOCUMENT.

DIMENSIONS: INCHES

TOLERANCES UNLESS OTHERWISE SPECIFIED:
0 PLC ± -
1 PLC ± -
2 PLC ± -
3 PLC ± -
4 PLC ± -
ANGLES ± -

MATERIAL -

FINISH -

DWN M.CLIFFORD 28SEP01
CHK -
APVD F.BACKHURST 28SEP01
PRODUCT SPEC -
APPLICATION SPEC -
WEIGHT -

Tyco Electronics
Tyco Electronics Corporation
Harrisburg, PA 17105-3608

NAME END FEED HD-1 APPLICATOR

SIZE	CAGE CODE	DRAWING NO	RESTRICTED TO
A1	00779	C-1339589	-

CUSTOMER DRAWING SCALE - SHEET 1 OF 1 REV B