THIS DRAWING IS UNPUBLISHED. RELEASED FOR PUBLICATION – ,– .
© COPYRIGHT – By – ALL RIGHTS RESERVED.

LOC	DIST
GP	00

REVISIONS

P	LTR	DESCRIPTION	DATE	DWN	APVD
	E1	REVISED PER ECO-11-004835	11MAR11	RK	HMR

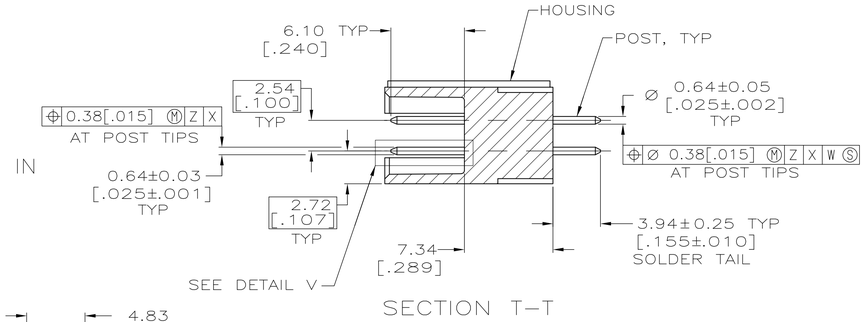

SECTION T–T

EJECTION LATCHES OMITTED IN THIS VIEW FOR CLARITY

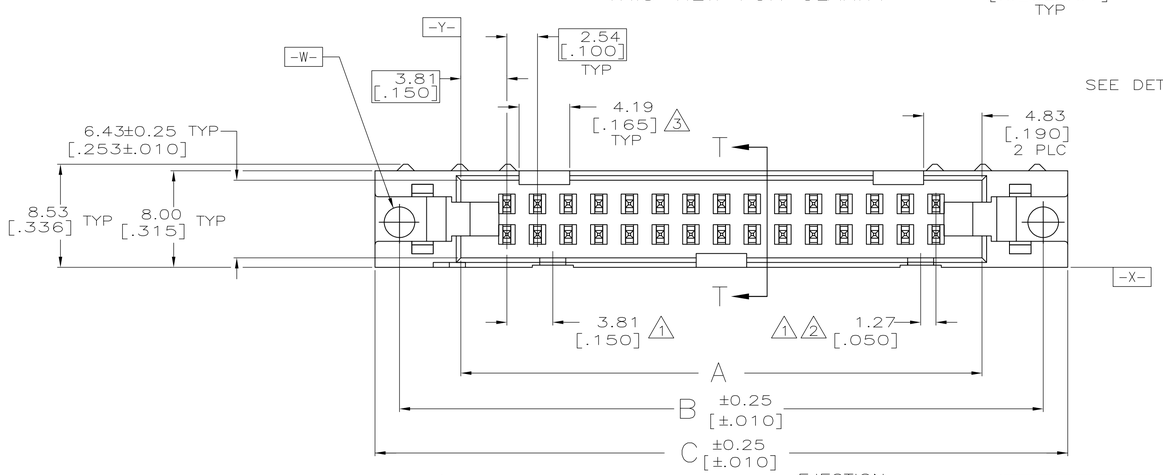

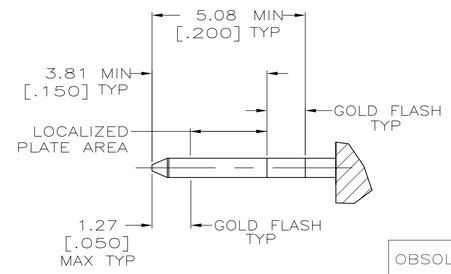

DETAIL V
SCALE 10:1

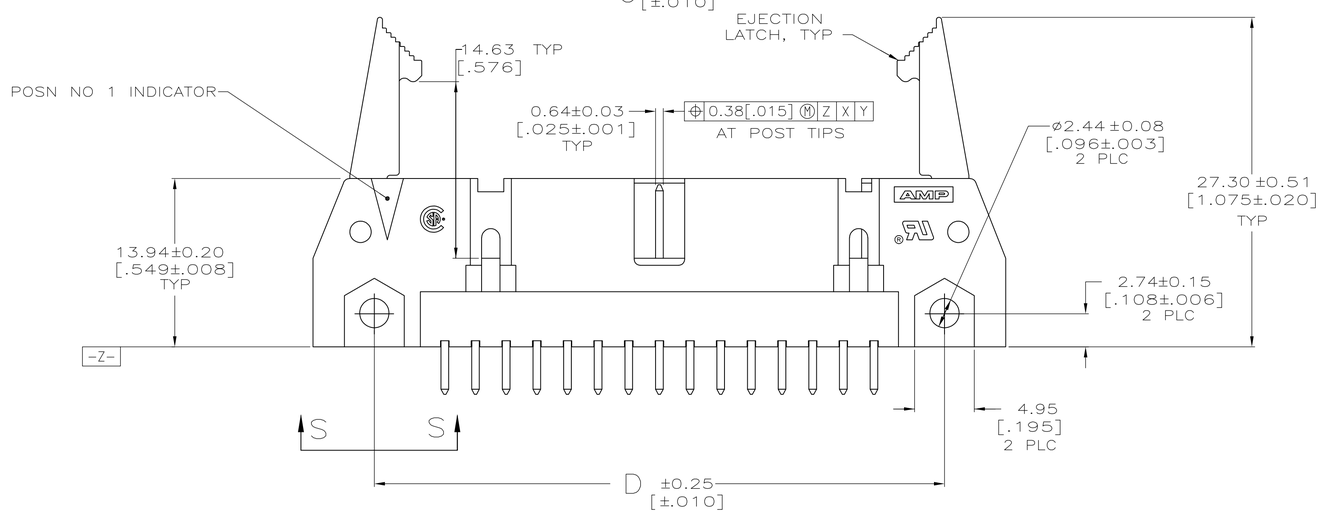

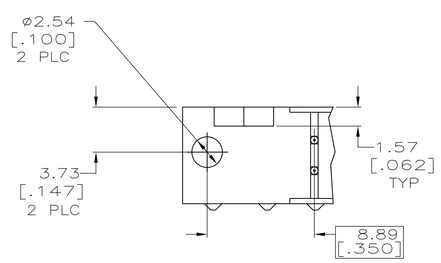

VIEW S–S

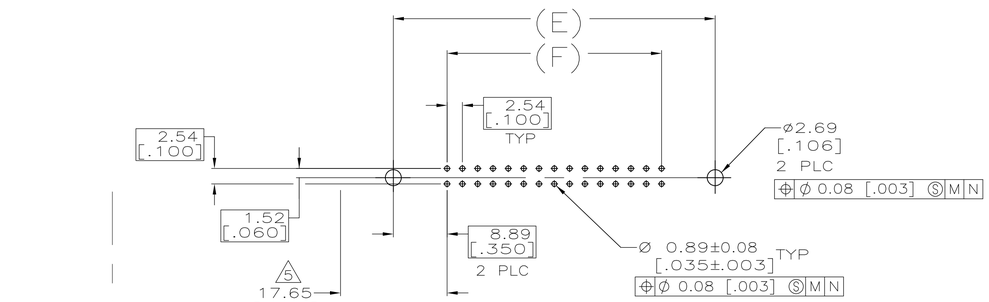

RECOMMENDED PC BOARD MOUNTING DIMENSIONS
SCALE 2:1

1. COORDINATE DIMENSION APPLIES FROM BASIC LOCATION.
2. 10 AND 14 POSITION SIZES CONTAIN ONLY ONE SLOT FOR SNAP–IN POLARIZER (MILITARY POLARIZATION) LOCATED AS SHOWN.
3. 10 POSITION SIZE CONTAINS ONLY ONE SLOT FOR DUAL POLARIZATION, LOCATED AS SHOWN.
4. RECOMMENDED PRINTED CIRCUIT BOARD THICKNESS IS 3.18[.125].
5. DISTANCE REQUIRED BY EJECTION LATCHES IN THE OPEN POSITION.
6. HOUSING & LATCHES: GLASS FILLED NYLON OR POLYESTER, UL94V–0 RATED, COLOR: SEE TABLE.
   POSTS: PH BRZ OR BRASS
7. POSTS: GOLD FLASH OVER PALLADIUM–NICKEL PLATE, 0.76µm[.000030] MIN TOTAL ON THE LOCALIZED PLATE AREA, 2.54µm[.000100] MIN TIN PLATE ON THE SOLDER–TAIL, 1.27µm[.000050] MIN NICKEL UNDERPLATE ON THE ENTIRE POST.
   –OR–
   0.76µm[.000030] MIN GOLD PLATE ON THE LOCALIZED PLATE AREA, 2.54µm[.000100] MIN TIN PLATE ON THE SOLDER–TAIL, 1.27µm[.000050] MIN NICKEL UNDERPLATE ON THE ENTIRE POST.
8. DATUMS –M– & –N– TO BE ESTABLISHED BY CUSTOMER.

	BLUE	53.34 [2.100]	71.12 [2.800]	65.02 [2.560]	75.18 [2.960]	71.12 [2.800]	60.96 [2.400]	44	3–5102321–3
OBSOLETE	BLUE	78.74 [3.100]	96.52 [3.800]	90.42 [3.560]	100.58 [3.960]	96.52 [3.800]	86.36 [3.400]	64	3–5102321–2
	BLUE	73.66 [2.900]	91.44 [3.600]	85.34 [3.360]	95.50 [3.760]	91.44 [3.600]	81.28 [3.200]	60	3–5102321–1
	BLUE	60.96 [2.400]	78.74 [3.100]	72.64 [2.860]	82.80 [3.260]	78.74 [3.100]	68.58 [2.700]	50	3–5102321–0
OBSOLETE	BLUE	48.26 [1.900]	66.04 [2.600]	59.94 [2.360]	70.10 [2.760]	66.04 [2.600]	55.88 [2.200]	40	2–5102321–9
OBSOLETE	BLUE	40.64 [1.600]	58.42 [2.300]	52.32 [2.060]	62.48 [2.460]	58.42 [2.300]	48.26 [1.900]	34	2–5102321–8
	BLUE	35.56 [1.400]	53.34 [2.100]	47.24 [1.860]	57.40 [2.260]	53.34 [2.100]	43.18 [1.700]	30	2–5102321–7
	BLUE	30.48 [1.200]	48.26 [1.900]	42.16 [1.660]	52.32 [2.060]	48.26 [1.900]	38.10 [1.500]	26	2–5102321–6
	BLUE	22.86 [.900]	40.64 [1.600]	34.54 [1.360]	44.70 [1.760]	40.64 [1.600]	30.48 [1.200]	20	2–5102321–4
	BLUE	17.78 [.700]	35.56 [1.400]	29.46 [1.160]	39.62 [1.560]	35.56 [1.400]	25.40 [1.000]	16	2–5102321–3
	BLUE	15.24 [.600]	33.02 [1.300]	26.92 [1.060]	37.08 [1.460]	33.02 [1.300]	22.86 [.900]	14	2–5102321–2
	BLUE	10.16 [.400]	27.94 [1.100]	21.84 [.860]	32.00 [1.260]	27.94 [1.100]	17.78 [.700]	10	2–5102321–1
	BLACK	78.74 [3.100]	96.52 [3.800]	90.42 [3.560]	100.58 [3.960]	96.52 [3.800]	86.36 [3.400]	64	1–5102321–2
	BLACK	73.66 [2.900]	91.44 [3.600]	85.34 [3.360]	95.50 [3.760]	91.44 [3.600]	81.28 [3.200]	60	1–5102321–1
	BLACK	60.96 [2.400]	78.74 [3.100]	72.64 [2.860]	82.80 [3.260]	78.74 [3.100]	68.58 [2.700]	50	1–5102321–0
	BLACK	48.26 [1.900]	66.04 [2.600]	59.94 [2.360]	70.10 [2.760]	66.04 [2.600]	55.88 [2.200]	40	5102321–9
	BLACK	40.64 [1.600]	58.42 [2.300]	52.32 [2.060]	62.48 [2.460]	58.42 [2.300]	48.26 [1.900]	34	5102321–8
	BLACK	35.56 [1.400]	53.34 [2.100]	47.24 [1.860]	57.40 [2.260]	53.34 [2.100]	43.18 [1.700]	30	5102321–7
	BLACK	30.48 [1.200]	48.26 [1.900]	42.16 [1.660]	52.32 [2.060]	48.26 [1.900]	38.10 [1.500]	26	5102321–6
	BLACK	27.94 [1.100]	45.72 [1.800]	39.62 [1.560]	49.78 [1.960]	45.72 [1.800]	35.56 [1.400]	24	5102321–5
	BLACK	22.86 [.900]	40.64 [1.600]	34.54 [1.360]	44.70 [1.760]	40.64 [1.600]	30.48 [1.200]	20	5102321–4
	BLACK	17.78 [.700]	35.56 [1.400]	29.46 [1.160]	39.62 [1.560]	35.56 [1.400]	25.40 [1.000]	16	5102321–3
	BLACK	15.24 [.600]	33.02 [1.300]	26.92 [1.060]	37.08 [1.460]	33.02 [1.300]	22.86 [.900]	14	5102321–2
	BLACK	10.16 [.400]	27.94 [1.100]	21.84 [.860]	32.00 [1.260]	27.94 [1.100]	17.78 [.700]	10	5102321–1
COLOR		F	E	D	C	B	A	NO OF POSN	PART NUMBER

THIS DRAWING IS A CONTROLLED DOCUMENT.

DIMENSIONS: mm[INCHES]

TOLERANCES UNLESS OTHERWISE SPECIFIED:
0 PLC ± –
1 PLC ± –
2 PLC ± 0.13[.005]
3 PLC ± –
4 PLC ± –
ANGLES ± –

MATERIAL 6
FINISH 7

DWN G. ATTADIA – DOCK5 01–07–05
CHK S. BOLASH 01–07–05
APVD M. WALMSLEY 01–07–05
PRODUCT SPEC 108–40018
APPLICATION SPEC –
WEIGHT –

TE Connectivity

NAME HEADER ASSY, UNIVERSAL, AMP–LATCH –

SIZE	CAGE CODE	DRAWING NO	RESTRICTED TO
A1	00779	C–5102321	–

CUSTOMER DRAWING | SCALE 4:1 | SHEET 1 OF 1 | REV E1

4805 (3/11)